# GOLIATH SERIES WINDOW SPECIFICATIONS

## Part 1 - GENERAL

### Scope

The Goliath series operable window systems as manufactured by Metro Glass. Furnish all materials, labour, and services for the complete fabrication, assembly and installation of aluminum operable windows including all necessary hardware and accessories and/or preparation as required based on the contract or the purchase agreement.

**Work Not Included:** Structural support of framing, interior building trims, and as specified by drawings and customer requirements per contract or purchase agreement.

### Quality Assurance

Drawings and specification for work in this section are based upon Metro "Goliath" Series framing system.

### Design & Performance

Goliath Series operable window system is designed to be used in most Metro Glass framing systems. Operable windows to fully comply with applicable standard specifications as typically referenced to the following requirement criteria: Air and water tightness, wind and other load resistance.

### Maintenance and Warranty

Upon request, Metro will provide instructions for proper cleaning and maintenance. Metro Glass Metal Products come with a two year warranty which shall begin from the day the product is shipped or from substantial completion of the installation. The warranty covers materials and workmanship as specified by drawings and customer requirements per contract or purchase agreement.

## Part 2 - PRODUCTS

### Materials

All materials to meet design and material specifications as applicable. Extruded aluminum shall be 6063 T5 alloy and temper. Any defects impairing strength, durability or appearance are not acceptable. Fasteners shall be of sufficient size and strength and made of corrosion-resistant and compatible materials. Glazing gaskets shall be Polyshim II Tape a 100% solid, highly adhesive and elastic, cross-linked butyl preformed tape with a continuous integral EPDM shim and extruded black santoprene designed and sized to perform their intended function.

### Fabrication

Frame assembly to provide accurately fit tight hairline joints only. Extruded profiles to be of sizes and profiles indicated in the contract or the purchase agreement. Corner joints shall be screw spline with fastening by means of anticorrosive steel screws and then welded.

### Finish - Anodized 6063 Material Code Identification

Exposed surfaces shall be finished as specified by customer:

| | |
|---|---|
| Satin Clear 14 | AA-M12C22A41 |
| Satin Medium Bronze 30 | AA-M12C22A44 |
| Satin Black 29 | AA-M12C22A44 |

Powdercoated and various other finishes (including shades of Bronze) available upon request.

### Installation

Framing to be installed plumb, level and square and glazed by an experienced crew in prepared openings in accordance to the manufacturers instructions and approved shop drawings, and as specified by drawings and customer requirements per contract or purchase agreement.



Bay 108 - 1626 115 Ave. N.E. Calgary, Alberta T3K 2E4
Phone: 403-250-9290 Fax: 403-291-0599
www.metroglass.ca

Benchmark and Non-standard Test Report: Report must be reproduced in its entirety

## SECTION 7
## RESULTS AND OBSERVATIONS

### OPERATING FORCE

The forces required to operate the system:

| | | | |
|---|---|---|---|
| Initiate Opening: | 21.4 N (4.8 lbs) | Initiate Closing: | 17.2 N (3.9 lbs) |
| Maintain Opening: | 21.0 N (4.7 lbs) | Maintain Closing: | 38.4 N (8.6 lbs) |
| Latch Opening: | 16.0 N (3.6 lbs) | Latch Closing: | 50.0 N (11.2 lbs) |

| | |
|---|---|
| Maximum allowable force to initiate motion: | 60 N (13.5 lbs) |
| Maximum allowable force to maintain motion: | 30 N (6.7 lbs) |
| Maximum allowable force to open and close latch: | 100 N (22.5 lbs) |

The tested specimen met the performance requirements of NAFS-08, NAFS-11, A440S1-09 and A440S1-17 for Operating Force.

### AIR LEAKAGE RESISTANCE

Air test data is indicated in the following table:

| Property | Area m2 (ft2) | Infiltration Rate L/s*m2 (cfm/ft2) | Exfiltration Rate L/s*m2 (cfm/ft2) | Compliance US (CAN) |
|---|---|---|---|---|
| Overall Assembly @ 300 Pa | 3.36 (36.12) | 0.24 (0.05) | 0.22 (0.04) | Pass (A3) |
| Casement @ 300 Pa | 1.44 (15.50) | 0.36 (0.07) | 0.39 (0.08) | Pass (A3) |
| Overall Fixed @ 300 Pa | 1.92 (20.62) | 0.14 (0.03) | 0.09 (0.02) | Pass (Fixed) |
| **Allowable Leakage Rates** | | | | |
| Maximum allowable air leakage rate (US): | | 1.5 L/s*m2, 0.3 cfm/ft2 | | |
| Maximum allowable air leakage rate (CAN – A3): | | 0.5 L/s*m2, 0.1 cfm/ft2 | | |
| Maximum allowable air leakage rate (CAN – Fixed): | | 0.2 L/s*m2, 0.04 cfm/ft2 | | |

The overall system met the US and Canadian performance requirements as reported above when evaluated under NAFS-08, NAFS-11, A440S1-09 and A440S1-17.

### CYCLIC WATER PENETRATION RESISTANCE

During the 24-minute test period, using a pressure differential of 730 Pa (15.3 psf), there was no water leakage observed. The system met the (CAN) PG100 Water Penetration Resistance performance requirements under NAFS-08, NAFS-11, A440S1-09 and A440S1-17.

### STATIC WATER PENETRATION RESISTANCE

During the 15-minute test period, using a pressure differential of 730 Pa (15.3 psf), there was no water leakage observed. The system met the (CAN) PG100 Water Penetration Resistance performance requirements under NAFS-08, NAFS-11, A440S1-09 and A440S1-17.



More than 50 Years of Manufacturing Innovative Aluminum Doors, Frames, Curtain Walls, Windows and Vents
Bay 108 - 1626 115 Ave. N.E. Calgary, Alberta T3K 2E4
Phone: 403-250-9290 Fax: 403-291-0599
www.metroglass.ca

Benchmark and Non-standard Test Report: Report must be reproduced in its entirety

## THERMAL CYCLING

| No. of Cycles | Exterior Conditions | | Interior Conditions |
|---|---|---|---|
| | Hot Temperature | Cold Temperature | |
| 6 | 82°C (180°F) | -18°C (0°F) | 24°C (74°F) |

Upon completion of the thermal cycling, there was found to be no failure or permanent deformation due to the expansion and contraction of the system that would cause any operational malfunction. The system met the Thermal Cycling performance requirements of AAMA 501.5 and AAMA 910.

## UNIFORM LOAD – DEFLECTION

Operable sash Uniform Load Deflection data:

| Test Pressure, Pa (psf) | Deflection Measurements, mm (in.) | | | | Compliance |
|---|---|---|---|---|---|
| | Positive | | Negative | | |
| | Deflection | Residual | Deflection | Residual | |
| 3600 (75.2) | 1.74 (0.07) | 0.08 (0.00) | 0.72 (0.03) | 0.05 (0.00) | **Pass PG75** |
| Latch stile span, L = 1440 mm (56.69") | | | Deflection limit, L/175 = 8.23 mm (0.32”) | | |

Mullion Uniform Load Deflection data:

| Test Pressure, Pa (psf) | Deflection Measurements, mm (in.) | | | | Compliance |
|---|---|---|---|---|---|
| | Positive | | Negative | | |
| | Deflection | Residual | Deflection | Residual | |
| 3600 (75.2) | 2.91 (0.11) | 0.10 (0.00) | 3.56 (0.14) | 0.13 (0.00) | **Pass PG75** |
| Vert. Mullion span, L = 1490 mm (58.66") | | | Deflection limit, L/175 = 8.51 mm (0.34”) | | |

## AIR LEAKAGE RESISTANCE #2

Air test data is indicated in the following table:

| Property | Area m2 (ft2) | Infiltration Rate L/s*m2 (cfm/ft2) | Exfiltration Rate L/s*m2 (cfm/ft2) | Compliance US (CAN) |
|---|---|---|---|---|
| Overall Assembly @ 300 Pa | 3.36 (36.12) | 0.13 (0.03) | 0.19 (0.04) | Pass (A3) |
| Casement @ 300 Pa | 1.44 (15.50) | 0.24 (0.05) | 0.32 (0.06) | Pass (A3) |
| Overall Fixed @ 300 Pa | 1.92 (20.62) | 0.05 (0.01) | 0.10 (0.02) | Pass (Fixed) |
| **Allowable Leakage Rates** | | | | |
| Maximum allowable air leakage rate (US): | | | 1.5 L/s*m2, 0.3 cfm/ft2 | |
| Maximum allowable air leakage rate (CAN – A3): | | | 0.5 L/s*m2, 0.1 cfm/ft2 | |
| Maximum allowable air leakage rate (CAN – Fixed): | | | 0.2 L/s*m2, 0.04 cfm/ft2 | |

The overall system met the US and Canadian performance requirements as reported above when evaluated under NAFS-08, NAFS-11, A440S1-09 and A440S1-17.



**More than 50 Years of Manufacturing Innovative Aluminum Doors, Frames, Curtain Walls, Windows and Vents**

Bay 108 - 1626 115 Ave. N.E. Calgary, Alberta T3K 2E4

Phone: 403-250-9290 Fax: 403-291-0599

www.metroglass.ca

Benchmark and Non-standard Test Report: Report must be reproduced in its entirety

## CYCLIC WATER PENETRATION RESISTANCE #2

During the 24-minute test period, using a pressure differential of 730 Pa (15.3 psf), there was no water leakage observed. The system met the (CAN) PG100 Water Penetration Resistance performance requirements under NAFS-08, NAFS-11, A440S1-09 and A440S1-17.

## STATIC WATER PENETRATION RESISTANCE #2

During the 15-minute test period, using a pressure differential of 730 Pa (15.3 psf), there was no water leakage observed. The system met the (CAN) PG100 Water Penetration Resistance performance requirements under NAFS-08, NAFS-11, A440S1-09 and A440S1-17.

## UNIFORM LOAD – STRUCTURAL

Operable sash Uniform Load Deflection data:

| Test Pressure, Pa (psf) | Residual Deflection Measurements, mm (in.) | | Compliance |
|---|---|---|---|
| | Positive | Negative | |
| 5400 (112.8) | 0.05 (0.00) | 0.00 (0.00) | **Pass PG75** |
| Latch stile span, L = 1440 mm (56.69") | | Residual deflection limit, L*0.2% = 2.88 mm (0.11") | |

Mullion Uniform Load Deflection data:

| Test Pressure, Pa (psf) | Residual Deflection Measurements, mm (in.) | | Compliance |
|---|---|---|---|
| | Positive | Negative | |
| 5400 (112.8) | 0.25 (0.01) | 0.13 (0.00) | **Pass PG75** |
| Vert. Mullion span, L = 1490 mm (58.66") | | Residual deflection limit, L*0.2% = 2.98 mm (0.12") | |

After the test loads were released, the specimen was inspected and there was found to be no failure or permanent deformation of any part of the window system that would cause any operational malfunction. The system met the overall PG75 Uniform Load performance requirements under NAFS-08 and NAFS-11.

## FORCED ENTRY RESISTANCE

Casement

Attempts to gain entry by opening the glazing panel, in accordance with the Disassembly and Sash Manipulation tests for a Type B assembly, were unsuccessful. The system met the Grade 20 Forced-entry Resistance performance requirements of NAFS-08 and NAFS-11.

Fixed

Attempts to gain entry by opening the glazing panel, in accordance with the Disassembly tests for a Type D assembly, were unsuccessful. The system met the Grade 40 Forced-entry Resistance performance requirements of NAFS-08 and NAFS-11.



**More than 50 Years of Manufacturing Innovative Aluminum Doors, Frames, Curtain Walls, Windows and Vents**
Bay 108 - 1626 115 Ave. N.E. Calgary, Alberta T3K 2E4
Phone: 403-250-9290 Fax: 403-291-0599
www.metroglass.ca

Benchmark and Non-standard Test Report: Report must be reproduced in its entirety

## SASH VERTICAL DEFLECTION TEST

| Test Load | Max. Deflection | Max. Allowable Deflection |
|---|---|---|
| 270 N (61 lbs) | 3.28 mm (0.13”) | 16.84 mm (0.66”) |

After the test load was released the specimen was inspected for failure or permanent deformation that would impair with the operation of the system. The system met the performance requirements of NAFS-08 and NAFS-11 for the Sash Vertical Deflection test.

## SASH AND HARDWARE LOAD TEST

After the test load was released it was found that the hardware was strong enough to support the 300 Pa (6.3 psf) load over the 10 second period. The system met the performance requirements of NAFS-08 and NAFS-11 for the Sash and Hardware Load Test.

## SASH / LEAF TORSION TEST

| Test Load | Max. Deflection | Max. Allowable Deflection |
|---|---|---|
| 90 N (20 lbs) | 8.26 mm (0.33”) | 62.17 mm (2.45”) |

After the test load was released the specimen was inspected for failure or permanent deformation that would impair with the operation of the system. The system met the performance requirements of NAFS-08 and NAFS-11 for the Sash/Leaf Torsion Test.

## INSECT SCREEN SERVICEABILITY

Test not applicable.

## THERMOPLASTIC CORNER WELD TEST

Test not applicable.



More than 50 Years of Manufacturing Innovative Aluminum Doors, Frames, Curtain Walls, Windows and Vents
Bay 108 - 1626 115 Ave. N.E. Calgary, Alberta T3K 2E4
Phone: 403-250-9290 Fax: 403-291-0599
www.metroglass.ca

## SECTION 8
## CONCLUSION

The Aluminum Casement – Fixed Combination Window Wall System, submitted by Metro Glass Products Ltd., tested and described within this report, achieved the overall performance requirements of Class AW – PG75 when tested in accordance with NAFS-08, NAFS-11, A440S1-09 and A440S1-17.

Benchmark and Non-standard Test Report: Report must be reproduced in its entirety



More than 50 Years of Manufacturing Innovative Aluminum Doors, Frames, Curtain Walls, Windows and Vents
Bay 108 - 1626 115 Ave. N.E. Calgary, Alberta T3K 2E4
Phone: 403-250-9290 Fax: 403-291-0599
www.metroglass.ca

| LAYTON CONSULTING LTD. | Project: T-Series Vent System: U-Value Calculation | | | | Project No: 1256-13547 | |
|---|---|---|---|---|---|---|
| British Columbia ● Alberta ● Yukon ● Washington ● Oregon California ● Hawaii ● Arizona | Sections: NFRC Sized Awning Vent | | | | Client: Metro Glass Products Ltd. | |
| | Calc. by: JL | Date: Aug, 2017 | Chk'd by: IC | Date: Aug, 2017 | App'd by: IC | Page: 7 |

## RESULT

| Calculated Section | U-Value (W/m2-K) | U-Value (BTU/h-ft2-°F) | Total Sq. Ft |
|---|---|---|---|
| Independent Vent System | 2.44 | 0.431 | 9.68 |
| T-Series Vent System | 2.60 | 0.459 | 9.68 |

**Table 2: Thermal Modelling Result – U-Value**

**Glazing Sealed Units:**

Cardinal 272 Low E (Surface 2) on 6mm Clear / 12.7mm warm edge space with 90% Argon / 6mm Clear

## CONCLUSION

From the thermal analysis on the proposed vent window, the T-Series Vent System modelled for Metro Glass Products Ltd in Calgary Alberta, the overall calculated U-Value for the independent Vent is 2.44 W/m2-K (0.431 Btu/h-ft2-°F) while the U-Value for the total T-Series Vent System is 2.60 W/m2-K (0.459 Btu/h-ft2-°F). The systems analysed included Metro Glass Products Ltd. independent vent window as well as the T-Series Vent System. All of the glazing sealed units are double glazed with Cardinal 272 Low E coating on surface 2 along with an argon gas fill and with polyurethane foam insulation to increase thermal performance. The model size for modelling is NFRC standard sizing for projected awning vent windows.

# GOLIATH SERIES
# OPERABLE WINDOW SYSTEM

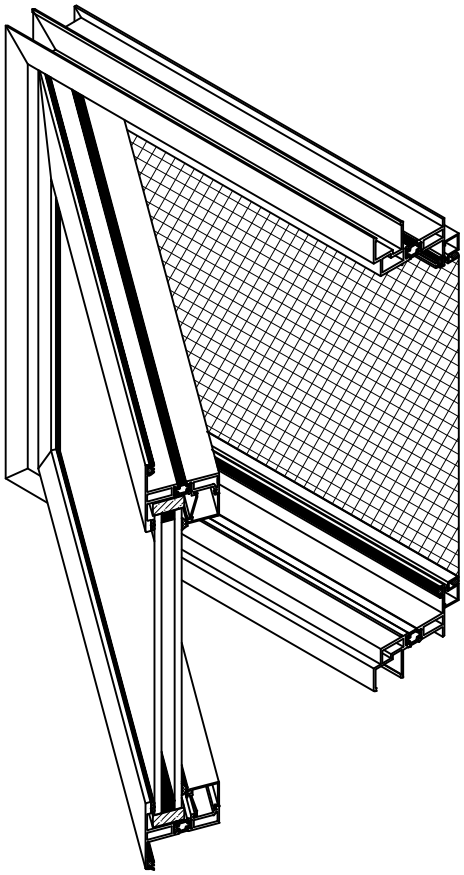

Metro Glass Products operable windows are a thermally broken high performance window with performance a key priority.
Available in:
- Awning (top hinged out)
- Hopper (bottom hinged in)
- Casement (side hinged comes in both open out and open in)

Easy installation into all curtain wall systems and most exterior and interior store front materials
All operable windows come with a standard recommended hardware group list.
Optional hardware product list available on request.

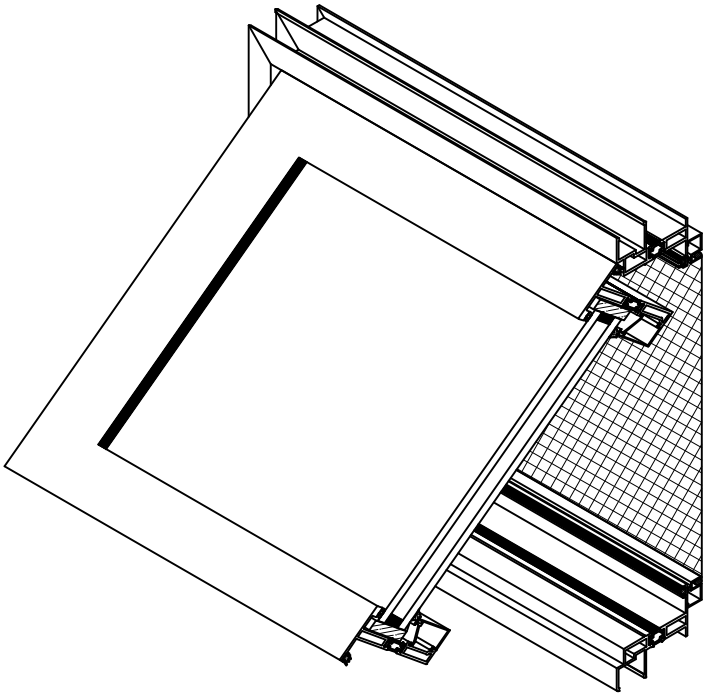



Bay 108 - 1626 115 Ave. N.E. Calgary, Alberta T3K 2E4
Phone: 403-250-9290 Fax: 403-291-0599
www.metroglass.ca

# GOLIATH OPERABLE WINDOW WITHIN A CURTAIN WALL SECTION & PLAN DETAILS

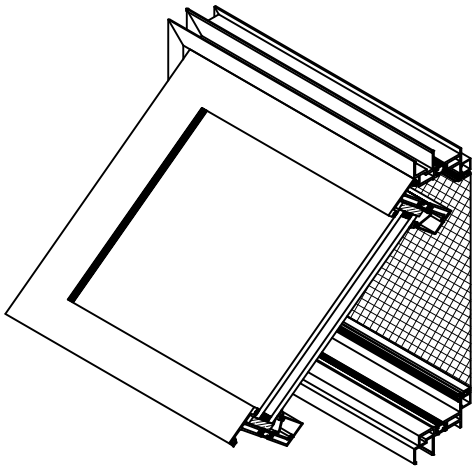

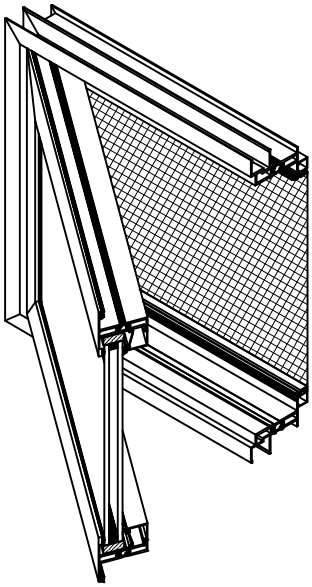

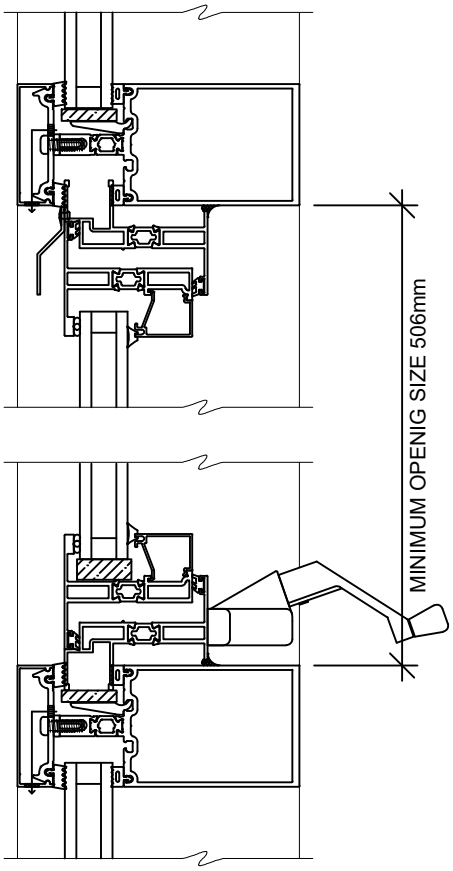


HP 2025 SERIES WITH HP GOLIATH SERIES VENT INSERT CROSS SECTION

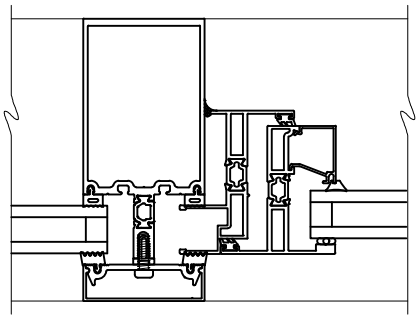

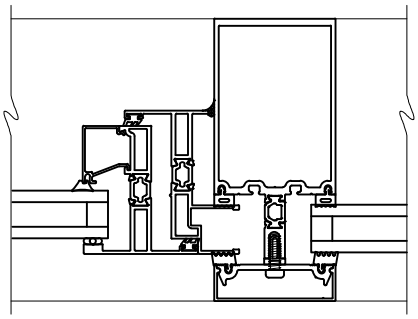

HP 2025 SERIES WITH HP GOLIATH SERIES VENT INSERT

# GOLIATH OPERABLE WINDOW WITHIN A T SERIES SECTION & PLAN DETAILS

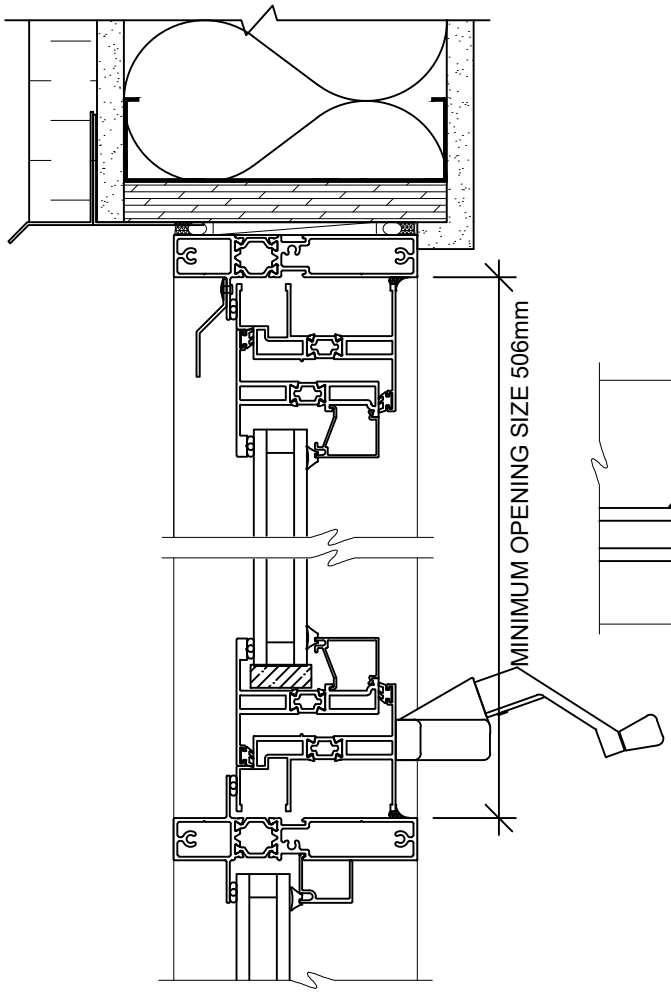


T SERIES WITH HP GOLIATH SERIES VENT INSERT CROSS SECTION

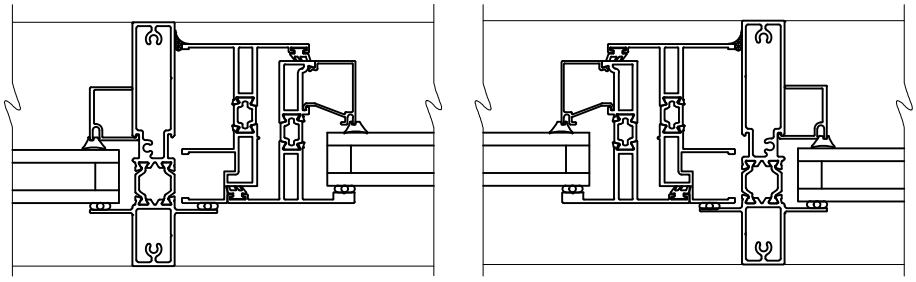

T SERIES WITH HP GOLIATH SERIES VENT INSERT

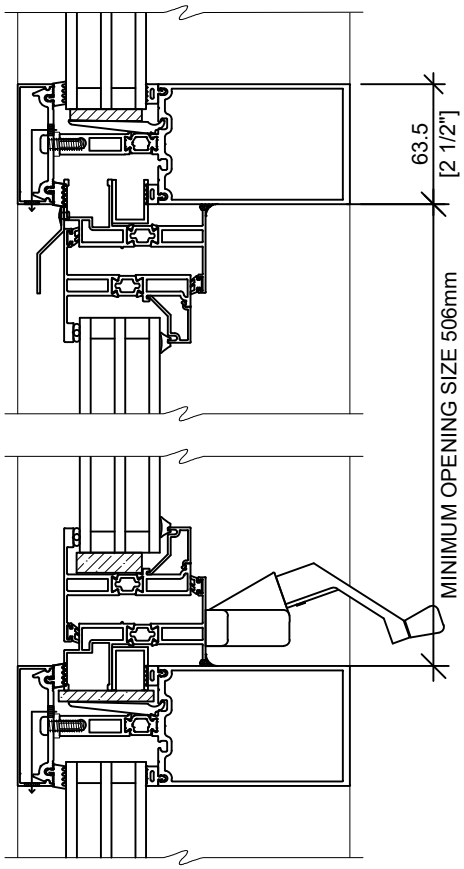


HP 2025-2TRG SERIES WITH
HP GOLIATH
SERIES VENT INSERT
CROSS SECTION

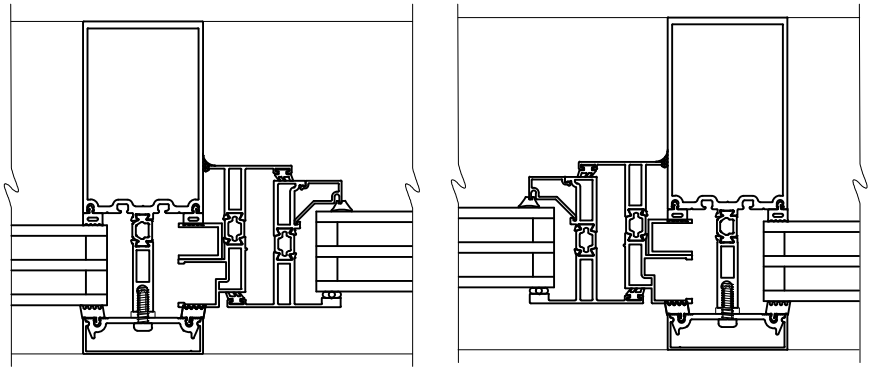

HP 2025-2TRG SERIES WITH
HP GOLIATH
SERIES VENT INSERT



Bay 108 - 1626 115 Ave. N.E. Calgary, Alberta T3K 2E4
Phone: 403-250-9290 Fax: 403-291-0599
www.metroglass.ca

# VENT AND CASEMENT PARTS & HARDWARE

| CROSS SECTION | PART # | DESCRIPTION | STOCK LENGTH | CLEAR ANODIZED | BRONZE ANODIZED | BLACK ANODIZED |
|---|---|---|---|---|---|---|
| 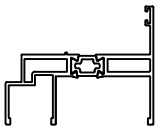 | T6 | 57mm X 52mm (2 1/4" X 2 1/8") VENT FRAME | 4.6 m | ✓ | ✓ | ✓ |
| 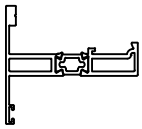 | T7 | 57mm X 52mm (2 1/4" X 2 3/8") VENT SASH | 4.6 m | ✓ | ✓ | ✓ |
| 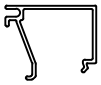 | T8 | VENT SASH GLASS STOP | 7.315 m | ✓ | ✓ | ✓ |
| | T9 | TRIPLE GLAZE GLASS STOP | 7.315m | ✓ | ✓ | ✓ |
| | T10 | DRIP CAP DEFLECTOR | 3.66 m | ✓ | ✓ | ✓ |
| | T13 | SCREEN BAR | 3.66 m | ✓ | ✓ | ✓ |
| 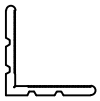 | T15 | CORNER BRACKET | 4.6 m | MILL FINISH | | |
| | 688 | GLAZING SEAL | 500 ft ROLLS | POLY | | |
| | 2388 | (120) VENT WEDGE GASKET | 500 ft ROLLS | POLY | | |
| | TREMCO | 1/8" POLY SHIM GLAZING TAPE | 12.1 m ROLLS | POLY | | |
| | | | | | | |

# VENT AND CASEMENT PARTS & HARDWARE

| CROSS SECTION | PART # | DESCRIPTION | CLEAR ANODIZED | BRONZE ANODIZED |
|---|---|---|---|---|
| | 2116862 | LOCKING CLAW HANDLE | ✓ | ✓ |
| | 2115491 | HOOK LOCK KEEPER | STAINLESS STEEL | |
| | 23.01.01.201<br>23.03.01.202 | ROTO OPERATOR<br>FOR CASEMENT VENTS VT 310 | ✓ | ✓ |
| | 2115717 | DUAL ARM ROTO OPERATOR<br>FOR AWNING VENTS | ✓ | ✓ |
| 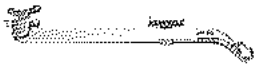 | SH-WX1 | CASEMENT PUSHBAR | ✓ | ✓ |
| 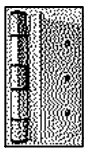 | | VENT BUTT HINGE | ✓ | ✓ |
| 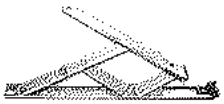 | YXL-23.2.25.06 | FRICTION HINGE<br>VARIOUS SIZES | STAINLESS STEEL | |
| | | SASH CONTROL DEVICE | STAINLESS STEEL | |
| | 27.20.01.102<br>27.20.01.103<br>25.29.05.103 | CAM HANDLE | ✓ | ✓ |
| | | CAM HANDLE KEEPER | ✓ | ✓ |
| | | | | |
| | | | | |